Section view J-J
Scale: 1:2

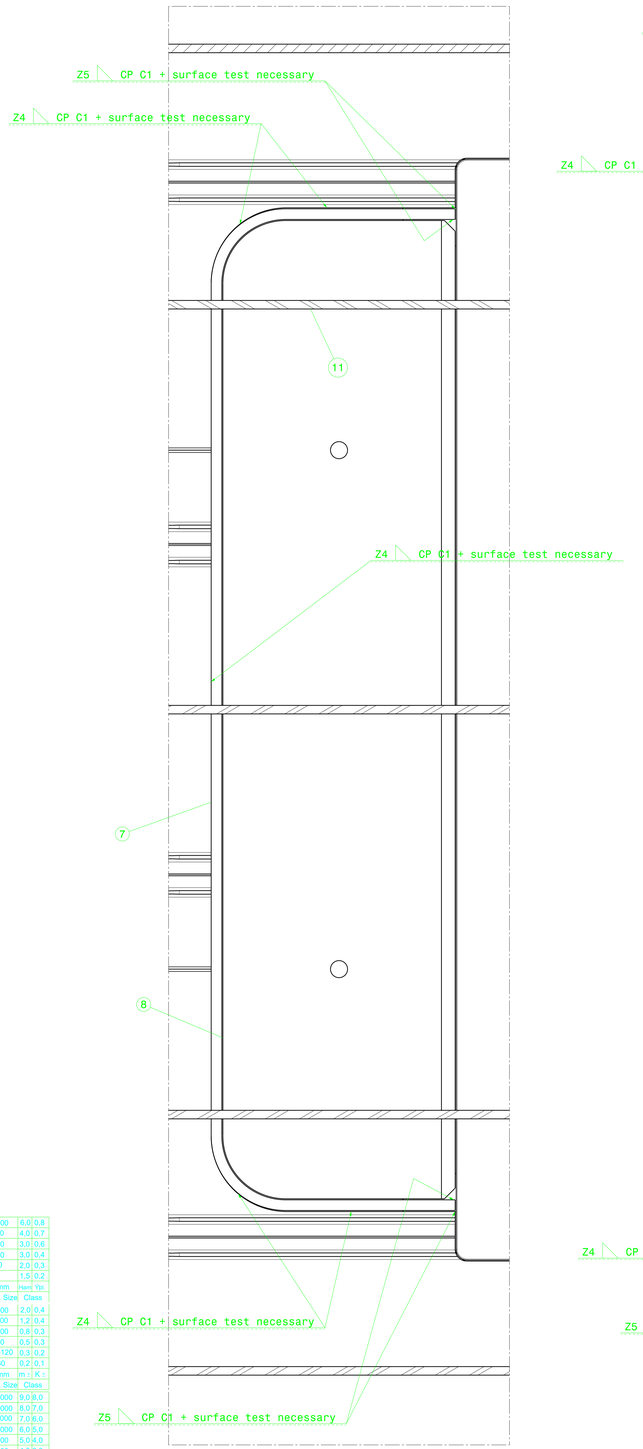

Section view I-I
Scale: 1:2

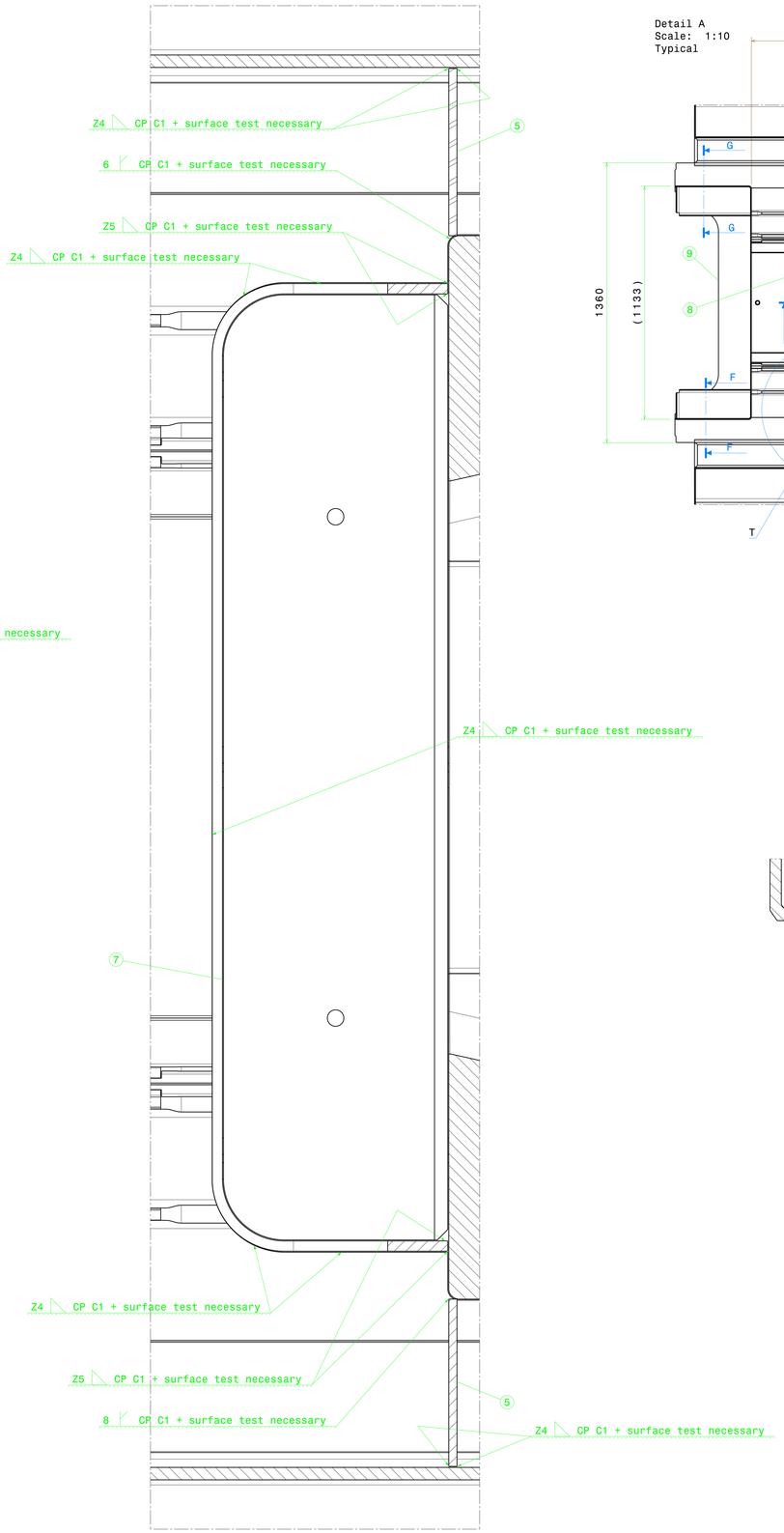

Detail A
Scale: 1:10
Typical

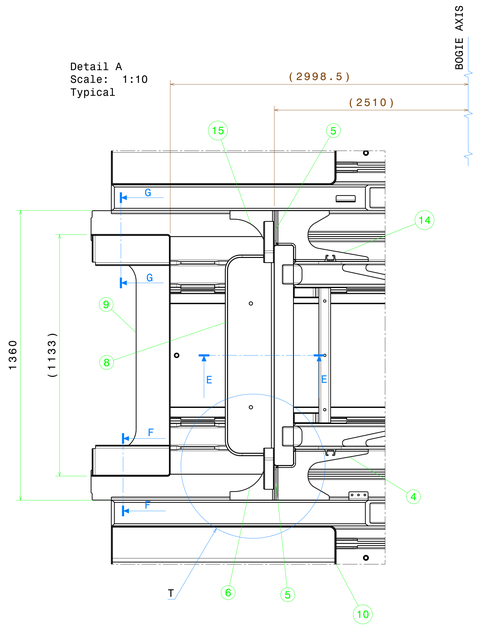

Section view E-E
Scale: 1:2

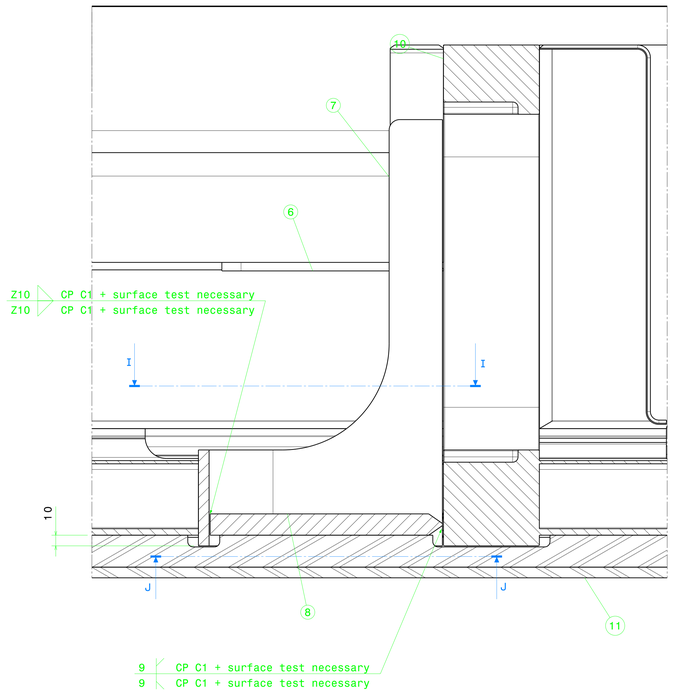

Section view G-G
Scale: 1:2

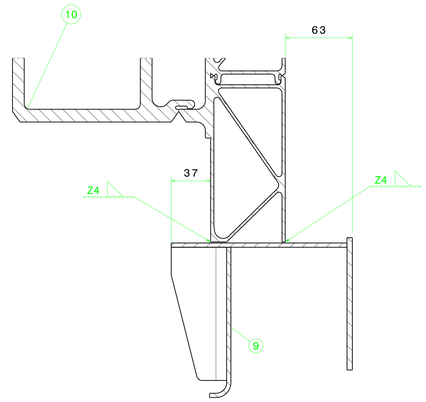

Section view F-F
Scale: 1:2

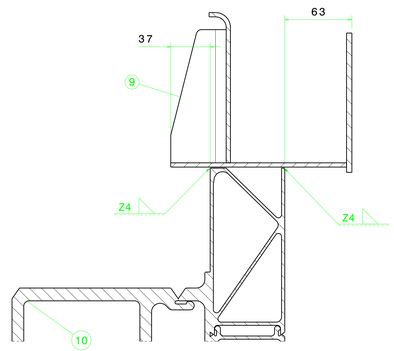

ISO 13920 Welded Construction Grade General Tolerances S 12708 Steel Casting		
<1000	6,0	0,8
<6300	4,0	0,7
<400	3,0	0,6
<250	3,0	0,4
100	2,0	0,3
40	1,5	0,2
L mm	Hard	Typ.
Nom. Size	Class	

<4000	2,0	0,4
<2000	1,2	0,4
<1000	0,8	0,3
<400	0,5	0,3
30-120	0,3	0,2
2-30	0,2	0,1
L mm	m ±	K ±
Nom. Size	Class	

>20000	9,0	8,0
<20000	8,0	7,0
<16000	7,0	6,0
<12000	6,0	5,0
<8000	5,0	4,0
<4000	4,0	3,0
<2000	3,0	2,0
<1000	2,0	1,5
<400	1,0	1,0
30-120	1,0	0,5
2-30	1,0	0,5
L mm	A ±	E ±
Nom. Size	Class	

No	Parça Adı / Designation Name of Item		Adet / Qty.	Resim No / Norm Drawing No / Norm	Malzeme / Material	Ölçü / Dimension	Ağırlık / Weight (Kg.)
	ISO 1302	ISO 8015	EN 22553	General Tol.	ISO 2768	f☐ m☒ H☐ K☒	
	EN 15085-2 Certification Level	CL1☒ CL2☐ CL3☐ CL4☐		Weld Pro.	ISO 13920	A☒ B☐ E☒ F☐	
				Cast Steel	ISO 12708	Lm2☐ Lr2☐ Sm2☐ Sr2☐	

3869,2

Approved	E.M. ERDOĞAN	Scale
Checked	Y. KARABEL	1:25
Prepared	M.K. TAŞ	

TÜRASAŞ
Türkiye Rayli Sistem Araçları San. A.Ş.

Complete_Underframe
-

FT71.03.01.00000

Technical Specifications					
Technical Document					
Fixture/Mould Asset ID.					
Coating/Heat Tre./Roughness					
Paint/Color	-	Modf. No	Modification Description	Date	Sign.

TYP

Date:02.07.2024 | Sheet : 2/4 | Size:A0 | Rev: 00

Reproduction, dissemination or use of this document is in all cases is only lawful by prior written permission of TÜRASAŞ. It prohibited. Offenders will be liable for the payment of damages. All rights reserved in the event of the grant of a patent, utility model or registration of an industrial design registration.